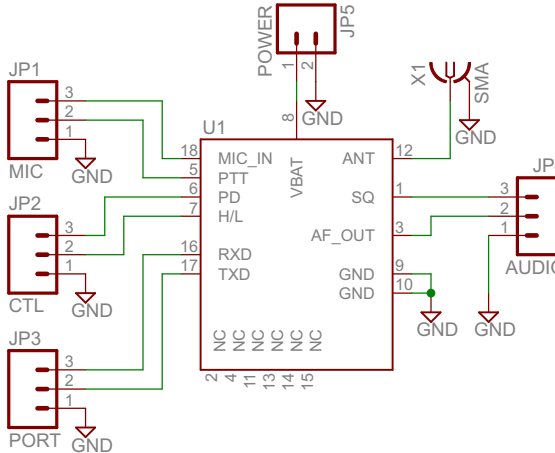
POWER
JP5
1
2
8
GND
X1
SMA
GND
JP1
3
2
1
MIC
GND
U1
18
5
6
7
16
17
MIC_IN
PTT
PD
H/L
RXD
TXD
VBAT
ANT
SQ
AF_OUT
GND
GND
12
1
3
9
10
JP4
3
2
1
AUDIO
GND
GND
JP2
3
2
1
CTL
GND
JP3
3
2
1
PORT
GND
NC
NC
NC
NC
NC
NC
2
4
11
13
14
15